RoHS

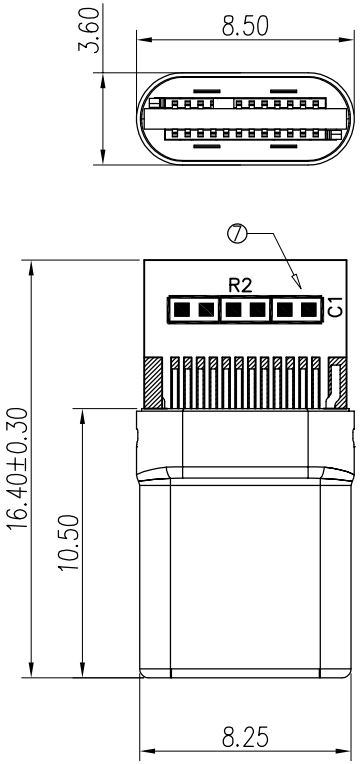

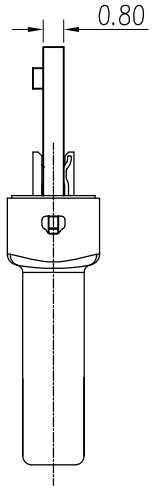

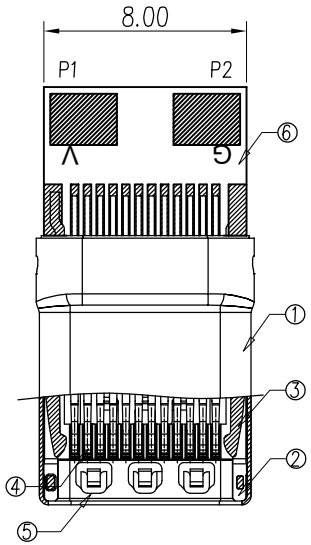

Specification:

1.Electrical Characteristics:
- Contact Current Rating: 3 Amperes Max.
- Rated Voltage: 20V Max.
- Dielectric Withstanding Voltage: AC 100V r.m.s.
- Insulation Resistance: 100 MΩ Minimum.
- Contact Resistance: 40 mΩ Maximum.

2.Environmental:
- Operating Temperature: −30℃~+85℃.

3.Mechanical Characteristics:
- Insertion Force: 5~20Nf.
- Withdrawal Force: 8~20Nf.
- Durability Cyeles: 10,000 Cyeles.

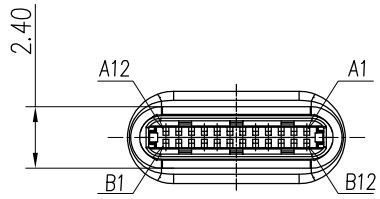

A12	A11	A10	A9	A8	A7	A6	A5	A4	A3	A2	A1
GND			VBUS	SBU1	D−	D+	CC	VBUS			GND
GND			VBUS	Vconn			SBU2	VBUS			GND
B1	B2	B3	B4	B5	B6	B7	B8	B9	B10	B11	B12

7	R1	56KΩ
6	P.C.B	FR4
5	EMC SPRING	Stainless Steel;SUS201,T=0.10mm;
4	CONTACT	Copper Alloy;AuNiSn; Au: 1u" T=0.15
3	LATCH	SUS201,T=0.35mm; Sn 80u"
2	HOUSING	LCP Thermoplastic,UL94V−0;
1	SHELL	SUS316,T=0.15mm; NI 50u"
NO.	NAME	DESCRIPTION

R1	56KΩ	
P2	A1,A12,B1,B12,Shell	
P1	A4,A9,B4,B9	

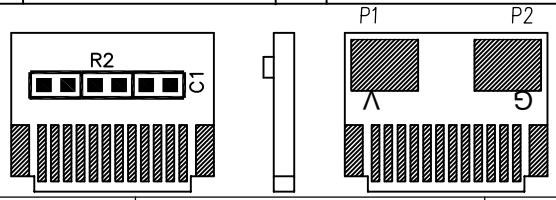

UNITS mm	SCALE 1:1	REV. B3	SHEET 1 OF 1
		DATE 2017.04.15	
GENERAL TOLERANCE X. ±0.30 X.X ±0.25 X.XX ±0.20 X.XXX ±0.10 X.X° ±3° X.XX° ±1°		DR. LIN YUN	
		CHK. LI JY	
		APPD. ZHANG	

深圳市创勤科技有限公司
SHENZHEN CHUANGQIN TECHNOLOGY CO.,LTD.

TITLE

TCMLS24P夹板带PCB板2焊点56K电阻

MAT'L SEE TABLE		FINISH SEE TABLE	
DWG.NO. CQ013−TMLS2456029	A	PART NO. SEE TABLE	SIZE A4